Control of Interconnected Chemical Reaction Networks

Márton, Lőrinc
Szederkényi, Gábor
Hangos, Katalin

SAPIENTIA - Hungarian University of Transylvania
SZTAKI - Institute for Computer Science and Control
University of Pannonia
Pázmany Péter Catholic University

Short Resume (Márton, Lőrinc)

- BSc and MsC - Control Engineering and Industrial Informatics - Petru Maior University - 1994-2000
- PhD - Robot Control - Budapest University of Technology and Economics - 2000-2003
- Bolyai Janos Postdoctoral Scholarship - Non-smooth nonlinearities in robotic and mechatronic systems - Budapest University of Technology and Economics - 2007-2010
- Humboldt Postdoctoral Scholarship - Fault Diagnosis, Teleoperation - DLR - German Aerospace Center - Institute of Robotics and Mechatronics - 2010-2012
- Visiting Researcher - Networked Control - Ruhr University - 2016
- Visiting Researcher, PhD Supervisor - Process Networks, Engineering Applications of Delay Systems - SZTAKI, University of Pannonia
- Associate Professor - Control Engineering, Robotics - Sapientia Hungarian University of Transylvania - current position

Networked Control Systems

A Networked Control System is a control system wherein the control loops are closed through a communication network. The related research is categorized into one of the following broader terms:

- Control over networks: Deals with control strategies and control system design over the network to minimize the effect of adverse network parameters (e.g. communication delay) on control performances.
- Control of networks: Study and research on communications and networks to make them suitable for real-time/reliable communication (routing control, congestion reduction).
- *Control using networks:* Exploit the advantages of the interconnections in the networks to solve complex control tasks (e.g. leader following multi-agent systems, consensus problem).

Overview

This presentation is based on the recent paper "L. Márton, G. Szederkényi, K. Hangos, *Distributed control of interconnected Chemical Reaction Networks with delay*, Journal of Process Control, Vol. 71, 2018, pp. 52-62".

Content:

1. Interconnected Passive Systems
2. Interconnected Chemical Reaction Networks
3. Distributed Setpoint Control Design
4. Case Study
5. Conclusions

Interconnected Passive Systems

Interconnected Systems

- An interconnected system consists of subsystems (agents) in which the input of each subsystem may depend on the outputs of the other subsystems.
- The dynamics of each subsystem is modeled using input affine ODEs (Ordinary Differential Equations) in the form

$$\begin{aligned} \dot{\mathbf{c}}^{(j)} &= \mathbf{f}^{(j)}(\mathbf{c}^{(j)}) + G^{(j)}(\mathbf{c}^{(j)})\mathbf{u}^{(j)},\ \mathbf{c}^{(j)}(0) = \mathbf{c}_{\circ}^{(j)}, \\ \mathbf{y}^{(j)} &= \mathbf{h}^{(j)}(\mathbf{c}^{(j)}) \end{aligned}$$

$\mathbf{c}^{(j)} \in \mathbb{R}^n$, $\mathbf{y}^{(j)}, \mathbf{u}^{(j)} \in \mathbb{R}^m$ are the state-, output- and input vectors.

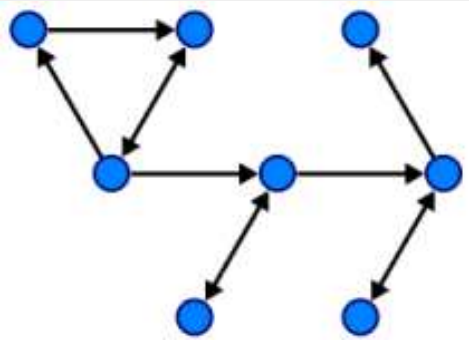

Passive Subsystems

A subsystem is called *passive*, if there exists a continuously differentiable function $S^{(j)} : \mathbb{R}^n \to \mathbb{R}$ such that

$$S^{(j)}(\mathbf{c}^{(j)}) \geq 0, \ \forall \mathbf{c}^{(j)},$$
$$S^{(j)}(\mathbf{0}) = 0,$$

$$\dot{S}^{(j)} \leq \mathbf{y}^{(j)\,T}\mathbf{u}^{(j)}, \quad \forall \mathbf{u}^{(j)}, \mathbf{c}^{(j)}.$$

or equivalently:

$$S^{(j)}(t) \leq S_{\circ}^{(j)} + \int_0^t \mathbf{y}^{(j)\,T}(\tau)\mathbf{u}^{(j)}(\tau)d\tau, \quad \forall \mathbf{u}^{(j)}, \mathbf{c}^{(j)}.$$

S is called the *storage function* of the subsystem.

Passive Subsystems - 2

- An input-affine system system $(\dot{\mathbf{c}}^{(j)} = \mathbf{f}^{(j)}(\mathbf{c}^{(j)}) + G^{(j)}(\mathbf{c}^{(j)})\mathbf{u}^{(j)})$ is passive iff the following conditions hold

$$\frac{\partial S^{(j)}}{\partial \mathbf{c}^{(j)}} \mathbf{f}^{(j)}(\mathbf{c}^{(j)}) \leq 0,$$
$$\frac{\partial S^{(j)}}{\partial \mathbf{c}^{(j)}} G^{(j)}(\mathbf{c}^{(j)}) = \left(\mathbf{h}^{(j)}(\mathbf{c}^{(j)})\right)^T$$

- Passivity theory plays a key role in analyzing the stability of nonlinear systems as it is shown that passivity of involves the stability of the autonomous system $\dot{\mathbf{c}}^{(j)} = \mathbf{f}^{(j)}(\mathbf{c}^{(j)})$ under mild conditions.

Interconnections

- *The underlying graph of the interconnected system* is a directed graph in which each vertex corresponds to a subsystem. There is a directed edge from the vertex k to the vertex j if the input of the jth subsystem depends explicitly on the output of the kth subsystem.
- *Neighbor set* of the jth vertex ($\mathcal{N}_j$): the kth vertex belongs to $\mathcal{N}_j$ if there is a directed edge from the vertex k to the vertex j.
- Consider the input of each subsystem in the form:

$$\mathbf{u}^{(j)}(t) = \mathbf{u}^{(j)}\left(\mathbf{y}^{(k_1)}(t - T_{k_1 j}), \ldots, \mathbf{y}^{(k_J)}(t - T_{k_J j})\right),$$

where $0 \leq T_{k_i j} < \infty$ is a constant transport delay.

Synchronization

- The outputs of the subsystems in the interconnected system are *synchronized* if $lim_{t\to\infty}|\mathbf{y}^{(j)}(t) - \mathbf{y}^{(k)}(t)| \to \mathbf{0}, \forall j, k$.
- Assume the inputs in the form (*synchronization protocol*)

$$\mathbf{u}^{(j)}(t) = \sum_{k\in\mathcal{N}_j} w_{kj}(\mathbf{y}^{(k)}(t - T_{kj}) - \mathbf{y}^{(j)}(t)),\ \ w_{kj} > 0,$$

- Under certain assumptions on the underlying graph (existence of a spanning tree) and on the subsystems (passivity) it can be shown[1] that the synchronization protocol ensures the synchronization of the subsystems, by using the the following functional:

$$S_\Sigma = \sum_{i=1}^{N} S^{(j)} + \sum_{j=1}^{N}\sum_{k\in\mathcal{N}_j}\int_{t-T_{kj}}^{t} \mathbf{y}^{(j)\,T}(\tau)\mathbf{y}^{(j)}(\tau)d\tau.$$

[1] N. Chopra, M.W. Spong, Passivity-based control of multi-agent systems, 2006

Interconnected Chemical Reaction Networks

Process Network

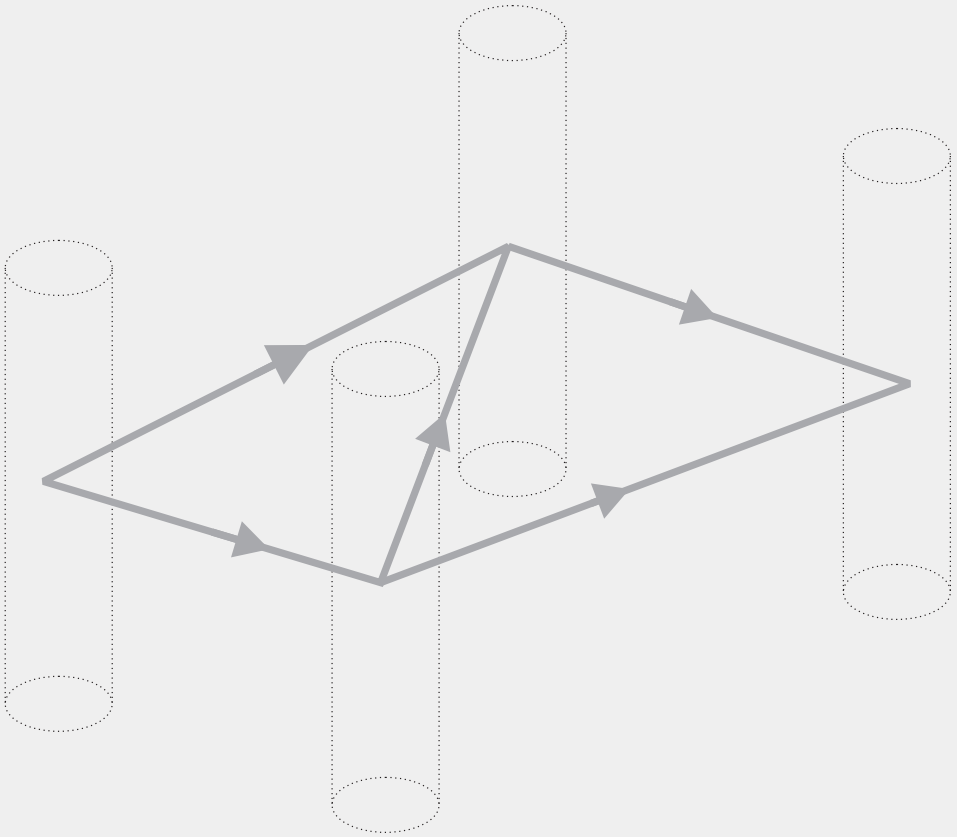

Process Network - 2

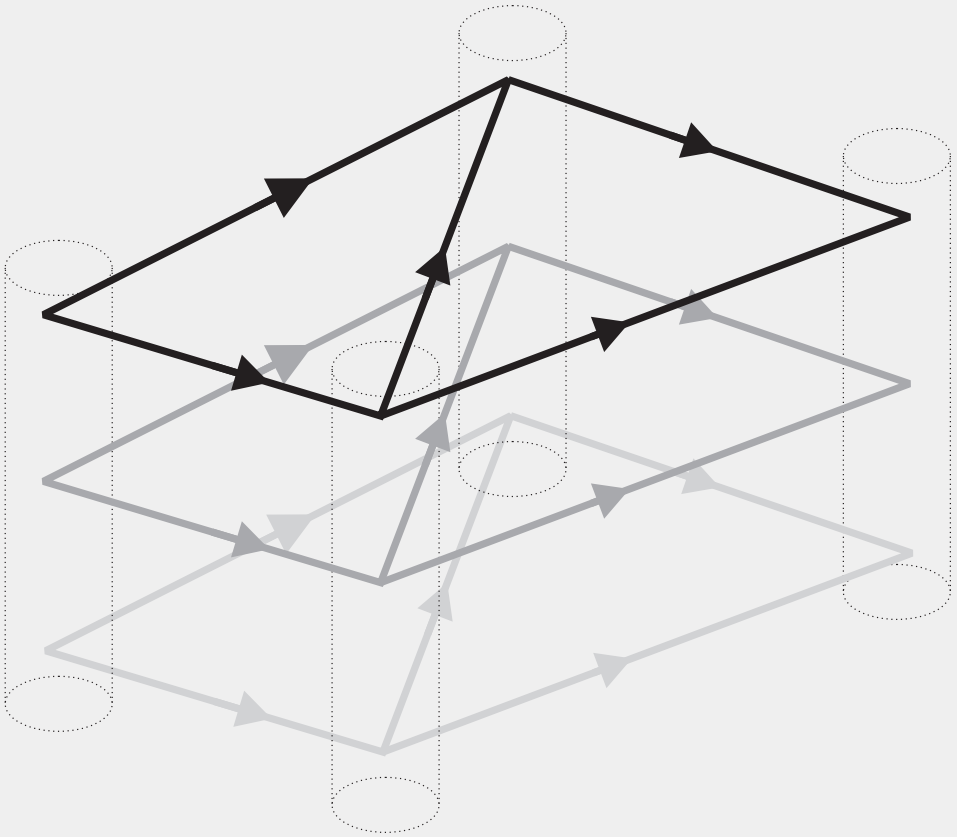

Process Network - 3

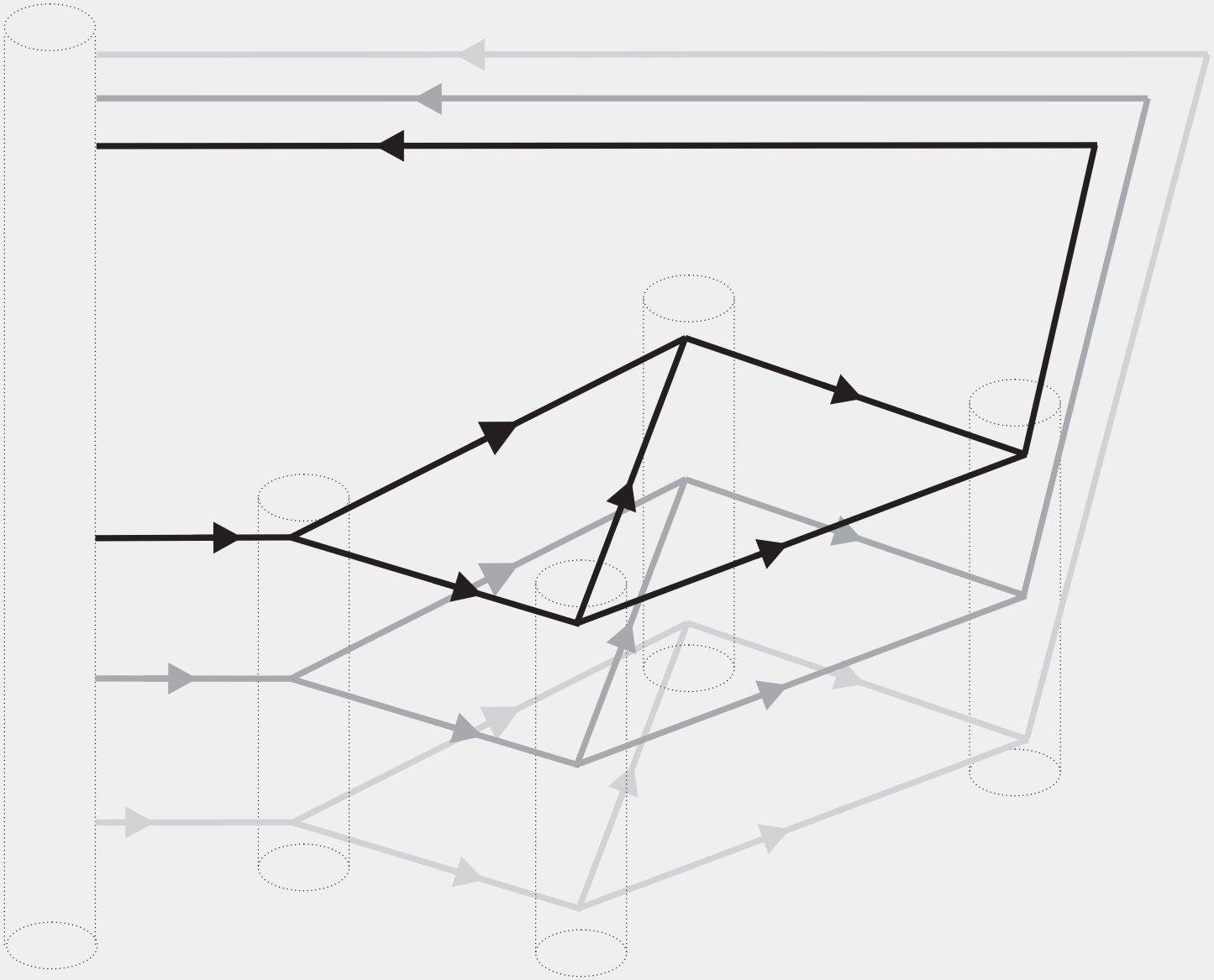

Process Network - 4

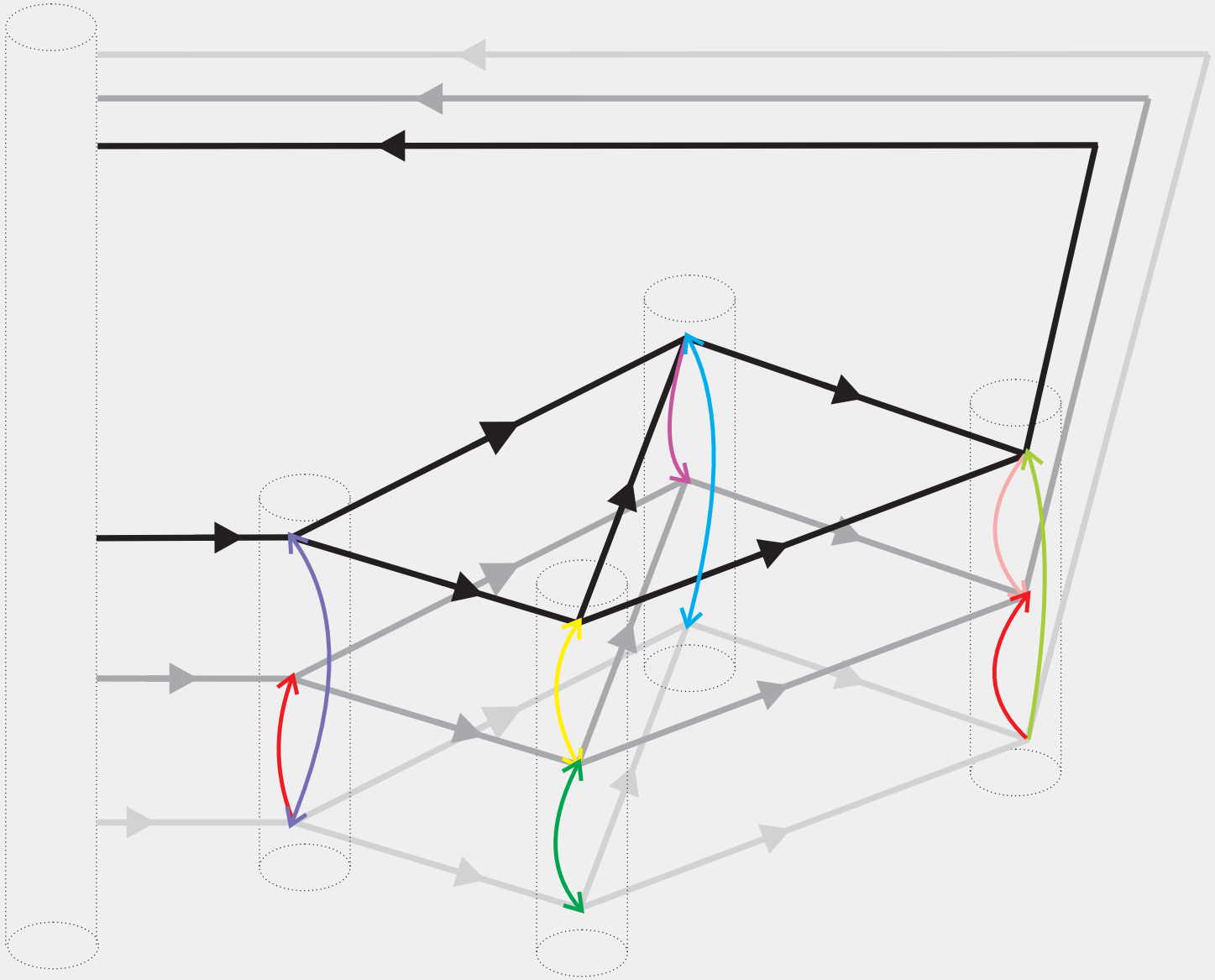

Convection Network

- Consider $\mathcal{C}$ continuously stirred tank reactors (CSTRs) that are connected through static connections. We assume constant volume, constant temperature each CSTR.
- Each CSTR has an inlet and an outlet port with volumetric flow rates v_{Ii} and v_i

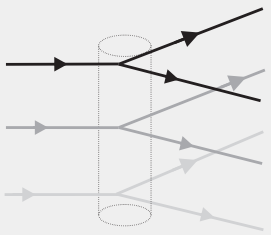

- Connections are set up between the reactors such that the outlet of the ith reactor is divided into fractions with the fraction coefficients α_{ij} that are fed into the jth reactor. This means that

$$\sum_{\ell=0}^{\mathcal{C}} \alpha_{i\ell} = 1, \; i = 0, ..., \mathcal{C},$$

$$v_{Ij} = v_j = \sum_{\ell=0}^{\mathcal{C}} \alpha_{\ell j} v_\ell, \; j = 0, ..., \mathcal{C}.$$

Convection Network - Environment

- We introduce a *pseudo-CSTR (CSTR0) for describing the environment*. Because of the constant volume assumption of each internal CSTR, this assumption also holds for the environment, such that $v_{l0} = v_0$.
- Because constant volume is assumed in every region, the sum of convective inflows from the environment is equal to the sum of the convective outflows to the environment.

$$v_0 = \sum_{\ell=0}^{\mathcal{C}} \alpha_{0\ell} v_\ell$$

Convection Network - General form

- We can formulate the *Kirchhoff convection matrix* as follows:

$$C_{\mathcal{C}} = \begin{bmatrix} -(1-\alpha_{00})v_0 & \alpha_{10}v_1 & \alpha_{20}v_2 & \dots & \alpha_{\mathcal{C}0}v_{\mathcal{C}} \\ \alpha_{01}v_0 & -(1-\alpha_{11})v_1 & \alpha_{21}v_2 & \dots & \alpha_{\mathcal{C}1}v_{\mathcal{C}} \\ \dots & & & & \\ \alpha_{0\mathcal{C}}v_0 & \alpha_{1\mathcal{C}}v_1 & \alpha_{2\mathcal{C}}v_2 & \dots & -(1-\alpha_{\mathcal{C}\mathcal{C}})v_{\mathcal{C}} \end{bmatrix}$$

- The constant volume assumption implies that $C_{\mathcal{C}}\mathbf{1} = \mathbf{0}$.
  Here $\mathbf{1} = (1\ 1\ \dots\ 1)^T$.
  Moreover, $\mathbf{1}^T C_{\mathcal{C}} = \mathbf{0}^T$.

Chemical Reaction Networks (CRN)

- Chemical Reaction Networks (CRNs) are composed of elementary irreversible reactions $\mathcal{R}_k : C_i \to C_j,\ k = 1..., R$, where $C_j,\ j = 1, ..., m$ are the so called complexes.
- A *complex* C_j is formally a linear combination of species $X_i,\ i = 1, ..., K$, such that $C_j = \sum_{i=1}^{K} \beta_{ij} X_i$, for $j = 1, \ldots, m$, where β_{ij} is the nonnegative stoichiometric coefficient corresponding to species X_i in complex C_j.

CRN - Dynamic Model

- The concentrations of the species are collected into a vector $\mathbf{c} \in \mathbb{R}^K$ so that $\mathbf{c}_i = [X_i]$ for $i = 1, \ldots, K$. The dynamics of a CRN describing the time evolution of the concentrations of the species induced by the reactions can be written as

$$\dot{\mathbf{c}} = YA_\kappa \varphi(\mathbf{c}),\ \mathbf{c}(0) = \mathbf{c}_\circ > \mathbf{0}$$

- $Y \in \mathbb{R}^{K \times m}$ is the complex composition matrix the jth column of which contains the stoichiometric coefficients of complex C_j, i.e. $Y_{ij} = \beta_{ij},\ \forall i, j$.
- $\varphi_i(\mathbf{c}) = \prod_{i=1}^{K} c_i^{Y_{ik}}$ is the mass action vector
- $A_\kappa \in \mathbb{R}^{m \times m}$ is the *Kirchhoff matrix of the CRN*:

$$A_\kappa(i,j) = \begin{cases} \kappa_{ji}, \text{ for } j \neq i \\ -\sum_{\ell \neq j} \kappa_{j\ell}, \text{ if } j = i. \end{cases}$$

where κ_{ji} is the rate constant of the reaction $\mathcal{R}_k : C_j \to C_i$.

CRN - Example

- Let us consider a chemical reaction network consisting of the following reactions:

$$\mathcal{R}_1 : 2X_3 \xrightarrow{\kappa_{12}} 2X_1 \xrightarrow{\kappa_{23}} 2X_2, \qquad \mathcal{R}_2 : 2X_3 \underset{\kappa_{31}}{\overset{\kappa_{13}}{\rightleftharpoons}} 2X_2.$$

- The model contains three species: X_1, X_2, X_3, and three complexes: $C_1 = 2X_3$, $C_2 = 2X_1$, $C_3 = 2X_2$. From these, the complex composition matrix can be written as

$$Y = \begin{bmatrix} 0 & 2 & 0 \\ 0 & 0 & 2 \\ 2 & 0 & 0 \end{bmatrix}$$

- The network contains four elementary reactions. The rate coefficients of these reactions are the non-zero off-diagonal elements of the Kirchhoff matrix which is given by

$$A_\kappa = \begin{bmatrix} -(\kappa_{12} + \kappa_{13}) & 0 & \kappa_{31} \\ \kappa_{12} & -\kappa_{23} & 0 \\ \kappa_{13} & \kappa_{23} & -\kappa_{31} \end{bmatrix}$$

CRN - Stoichiometric compatibility class

- The reaction vector of $\mathcal{R}_k$ is formed by the corresponding stoichiometric vectors, such that $\mathbf{e}_k = \mathbf{Y}_{.i} - \mathbf{Y}_{.j}$. The span of the reaction vectors defines the stoichiometric subspace of the CRN: $\mathcal{S}_{\mathbf{c}} = \mathrm{span}\,\{\mathbf{e}_k\}$. The positive stoichiometric compatibility classes of a CRN are represented by $\mathcal{S}_{\mathbf{c}\circ} = (\mathbf{c}_\circ + \mathcal{S}_{\mathbf{c}}) \cap \mathbb{R}_+^{ns}$.
- The general CRN model may have multiple (even infinite number of) steady states in the whole state space. Therefore, the structure and number of equilibria are most often studied by restricting the dynamics to the stoichiometric compatibility classes corresponding to different initial conditions.

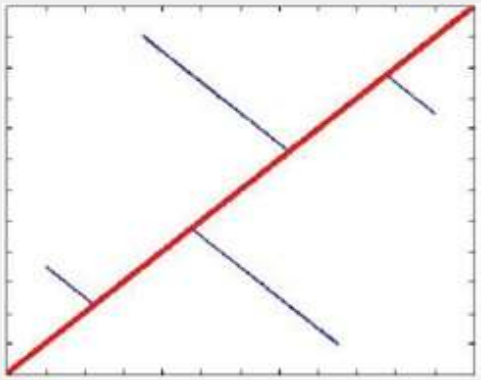

CRN - Stability

- The *deficiency* of a CRN realization ($\dot{\mathbf{c}} = YA_\kappa\varphi(\mathbf{c})$) is defined as $\delta = \dim(\mathrm{Ker}\,Y \cap \mathrm{Im}A_\kappa)$.
- A CRN is *weakly reversible* if the existence of a directed path (i.e. reaction sequence) from the complex C_i to the complex C_j implies the existence of a directed path from C_j to C_i.
- If a CRN is weakly reversible and has zero deficiency then it has exactly one equilibrium point ($\mathbf{c}^*$) in each positive stoichiometric compatibility class that is at least locally stable with the following Lyapunov function:

$$\tilde{S}(\mathbf{c}) = \sum_{i=1}^{K} \left[c_i \left(\ln \frac{c_i}{c_i^*} - 1 \right) + c_i^* \right]$$

Interconnected Open CRNs

- A number of $\mathcal{C}$ mass-action chemical reaction networks are considered.
- Transport delays ($T_{\ell j}$) are present in the interconnections among the CSTRs.
- The state equation of the jth open CRN reads as:

$$V_j \frac{dc_i^{(j)}}{dt} = \sum_{\ell=0}^{\mathcal{C}} \alpha_{\ell j} v_\ell c_i^{(\ell)}(t - T_{\ell j}) - v_j c_i^{(j)} + V_j Y^{(j)} A_\kappa^{(j)} \varphi(\mathbf{c}^{(j)}),$$

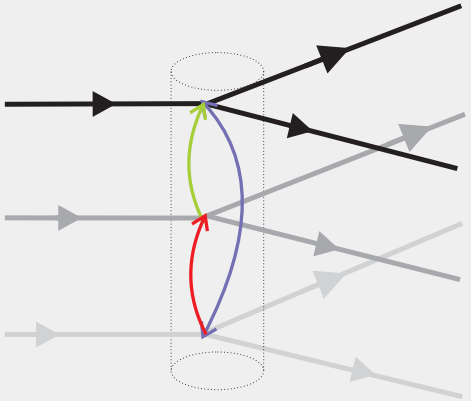

Passivity of open CRNS

- Consider that the *input* of the jth open CRN ($\mathbf{u}^{(j)} \in \mathbb{R}^K$) is the difference between the convective component mass in- and outflow terms:
$$\frac{d\mathbf{c}^{(j)}}{dt} = Y^{(j)} A_\kappa^{(j)} \varphi^{(j)}(\mathbf{c}^{(j)}) + \frac{1}{V_j}\mathbf{u}^{(j)}.$$
- *Lemma:* If the homogeneous part of the model above is weakly reversible and has zero deficiency then the open CRNis passive from input $\mathbf{u}^{(j)}$ to the output $\mathbf{y}^{(j)} = \zeta \ \left(\mathrm{Ln}\mathbf{c}^{(j)} - \mathrm{Ln}\mathbf{c}^{(j)*}\right)$.
- *Idea of proof:* Let the storage function $S^{(j)} = \zeta V_j \left(\left(\mathrm{Ln}\ \mathbf{c}^{(j)} - \mathrm{Ln}\ \mathbf{c}^{(j)*}\right)^T \mathbf{c}^{(j)} - \mathbf{1}^T \left(\mathbf{c}^{(j)} - \mathbf{c}^{(j)*}\right)\right),\ \zeta > 0.$
- From weakly reversible and zero deficiency assumption yields that $\dot{S}^{(j)}(\mathbf{c}^{(j)}) \leq 0$
- The passive output yields from direct computation $\mathbf{y}^{(j)} = \frac{\partial S^{(j)}}{\partial \mathbf{c}^{(j)}} G^{(j)}(\mathbf{c}^{(j)})$.

Distributed Setpoint Control Design

Control Objective

Let the setpoint of the jth CSTR be $\mathbf{c}_{SP}^{(j)}$ *that belongs to the equilibrium point set of the jth CRN.*
Design a distributed controller for each CRN such to assure that $\mathbf{c}^{(j)} \to \mathbf{c}_{SP}^{(j)}$ *as* $t \to \infty$, $\forall j = 1 \ldots \mathcal{C}$.

Controlled Process Network

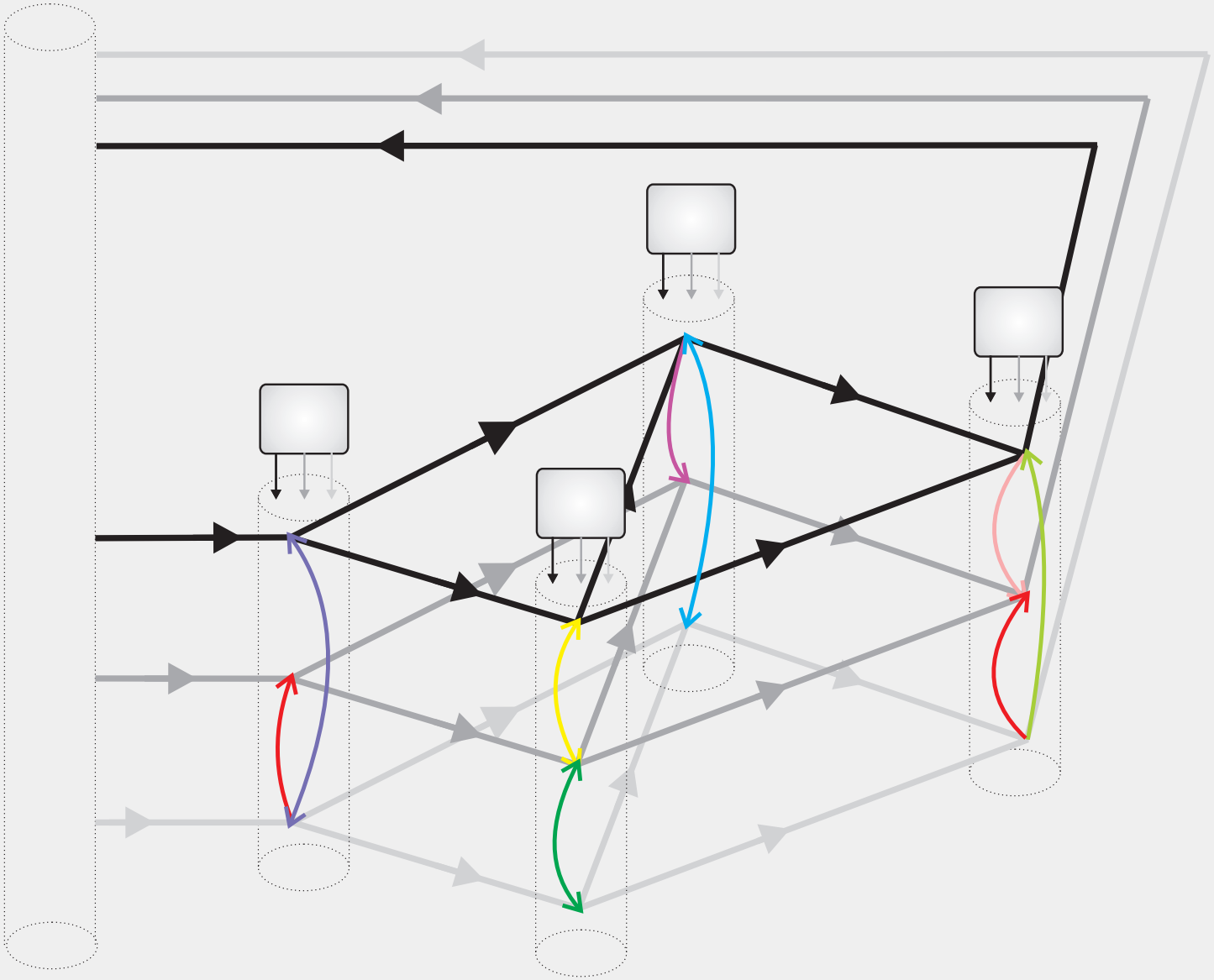

Local Control Input

- In the controlled process network the input vector of the jth open CRN has the form:

$$\mathbf{u}^{(j)} = \sum_{\ell=0}^{\mathcal{C}} a_{\ell j}\widetilde{v}_\ell \mathbf{c}^{(\ell)}(t - T_{\ell j}) + a_{Lj}\widetilde{v}_j \mathbf{c}_L^{(j)} - \widetilde{v}_j \mathbf{c}^{(j)}$$

where $\widetilde{v}_j = v_j + v_{Lj}$, $a_{Lj} = \mathrm{v}_{Lj}/\widetilde{v}_j$.
Let us distinguish in the inflow vector $\mathbf{u}^{(j)}$ the interconnection term ($\mathbf{i}^{(j)}$) and the local control term ($\mathbf{u}_L^{(j)}$) as follows:

$$\begin{aligned}
\mathbf{u}^{(j)} &= \mathbf{i}^{(j)} + \mathbf{u}_L^{(j)}, \\
\mathbf{i}^{(j)} &= \sum_{\ell=0}^{\mathcal{C}} a_{\ell j}\widetilde{v}_\ell \mathbf{c}^{(\ell)}(t - T_{\ell j}) - (1 - a_{Lj})\widetilde{v}_j \mathbf{c}^{(j)}, \\
\mathbf{u}_L^{(j)} &= a_{Lj}\widetilde{v}_j \left(\mathbf{c}_L^{(j)} - \mathbf{c}^{(j)}\right).
\end{aligned}$$

Process Network - Environment Interconnections

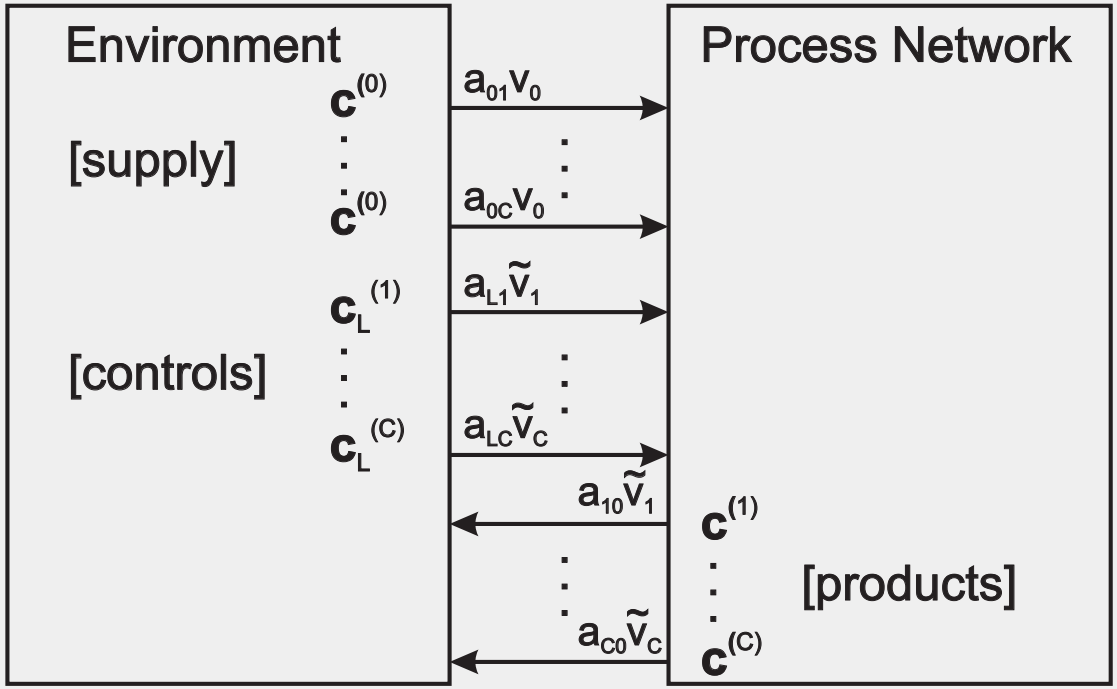

Concept of Synchronization-based Control

- Recall the passive output of the jth CRN $\mathbf{y}^{(j)} = \zeta\ \left(\mathrm{Ln}\mathbf{c}^{(j)} - \mathrm{Ln}\mathbf{c}^{(j)*}\right)$.
- If the synchronization can be reached in the process network, the steady-state outputs of the CRNs take the same value, i.e. $\mathbf{y}^{(j)} = \mathbf{y}^{(k)}$ as $t \to \infty\ \forall j, k = 1 \ldots \mathcal{C}$.
- As the supply has constant concentration vector, i.e. $\mathbf{c}^{(0)} = \mathbf{c}^{(0)*}$ it can be considered that $\mathbf{y}^{(0)}(t) = \mathbf{0}$.
- If the outputs of all CRNs are synchronized ($\mathbf{y}^{(j)} = \mathbf{y}^{(i)}\ \forall i, j$), it yields that $\mathbf{y}^{(j)} = \mathbf{y}^{(0)} = \mathbf{0}\ \forall j \in \mathcal{N}_0$, i.e. $\mathbf{c}^{(j)} = \mathbf{c}^{(j)*}\ \forall j \in \mathcal{N}_0$. Moreover, if the underlying graph of the process network contains a spanning tree which root is CSTR0, $\mathbf{y}^{(j)} = \mathbf{0}$, i.e. $\mathbf{c}^{(j)} = \mathbf{c}^{(j)*}\ \forall j = 1 \ldots \mathcal{C}$.

Local Control Input Computation

- Recall again the *desired* passive output $\mathbf{y}^{(j)} = \zeta \left(\mathrm{Ln}\mathbf{c}^{(j)} - \mathrm{Ln}\mathbf{c}_{SP}^{(j)}\right)$.
- To satisfy the requirements for synchronization, the input of the jth subsystem should be:

$$\mathbf{u}_{\mathrm{y}}^{(j)} = \sum_{\ell=0}^{\mathcal{C}} a_{\ell j}\widetilde{v}_{\ell}\mathbf{y}^{(\ell)}(t - T_{\ell j}) - (1 - a_{Lj})\widetilde{v}_j\mathbf{y}^{(j)}.$$

- We can compute the explicit form of the local control input which satisfies $\mathbf{u}^{(j)} = \mathbf{i}^{(j)} + \mathbf{u}_L^{(j)} = \mathbf{u}_{\mathrm{y}}^{(j)}$.

$$\mathbf{c}_L^{(j)} = \mathbf{y}^{(j)} + \frac{1}{a_{Lj}\widetilde{v}_j}\left(\sum_{\ell=0}^{\mathcal{C}} a_{\ell j}\widetilde{v}_{\ell}\left(\mathbf{y}^{(\ell)}(t - T_{\ell j}) - \mathbf{c}^{(\ell)}(t - T_{\ell j})\right) - \widetilde{v}_j\left(\mathbf{y}^{(j)} - \mathbf{c}^{(j)}\right)\right).$$

The Properties of the Control

Theorem: Consider a system of interconnected CRNs. If the CRN subsystems have zero deficiency, are weekly reversible and persistent, the underlying graph of the interconnected system contains a directed spanning tree which root is the CSTR0, and $\mathbf{c}_L^{(j)}$ can be chosen such that $\mathbf{u}^{(j)} = \mathbf{u}_{\mathrm{y}}^{(j)}$ element-wise, then $\mathbf{c}^{(j)}(t)$ is bounded for $t \geq 0$ and $\mathbf{c}^{(j)} \to \mathbf{c}_{SP}^{(j)}$ as $t \to \infty$ $\forall j > 0$.

The Properties of the Control

Idea of proof:

- Define the following Lyapunov-Krasovskii functional:

$$S_\Sigma = 2\sum_{j=0}^{\mathcal{C}} S^{(j)} + \sum_{j=0}^{\mathcal{C}}\sum_{\ell=0}^{\mathcal{C}} a_{\ell j}\widetilde{v}_\ell \int_{t-T_{\ell j}}^{t} \mathbf{y}^{(\ell)\,T}\mathbf{y}^{(\ell)}\,d\xi.$$

- By applying the proposed control and the introduced assumptions, it can be shown that:

$$\dot{S}_\Sigma \quad \leq \quad -\sum_{j=0}^{\mathcal{C}}\sum_{\ell=0}^{\mathcal{C}} a_{\ell j}\widetilde{v}_\ell \left(\mathbf{y}^{(j)} - \mathbf{y}^{(\ell)}(t-T_{\ell j})\right)^T \left(\mathbf{y}^{(j)} - \mathbf{y}^{(\ell)}(t-T_{\ell j})\right) \leq 0.$$

The Properties of the Control

Idea of proof:

- Let us introduce the notation

$$e_i^{(j,\ell)}(t) = y_i^{(j)}(t) - y_i^{(\ell)}(t - T_{\ell j}).$$

- As $\dot{S}_\Sigma \leq 0$ it yields that $S_\Sigma(\infty) = \lim_{t\to\infty} S_\Sigma(t) < \infty$ for finite $S_\Sigma(0)$. It yields that:

$$\sum_{j=0}^{\mathcal{C}} \sum_{\ell=0}^{\mathcal{C}} a_{\ell j} \widetilde{v}_\ell \sum_{i=1}^{K} \int_{t=0}^{\infty} \left(y_i^{(j)}(\xi) - y_i^{(\ell)}(\xi - T_{\ell j}) \right)^2 d\xi \leq S_\Sigma(0) - S_\Sigma(\infty) < \infty.$$

  Hence, $e_i^{(j,\ell)} \in L_2 \ \forall i, j, \ell$.

- Since $S_\Sigma(t) < \infty$ and $c_{SPi}^{(j)}$ is a finite, strictly positive constant $\forall\ i, j$, it yields that $c_i^{(j)}$ and consequently $e_i^{(j,\ell)}, y_i^{(j)} \in L_\infty \ \forall i, j, \ell$.
- By inspecting the dynamics of the controlled subsystems, it can also be seen that $\dot{y}_i^{(j)} \in L_\infty$.
- As $e_i^{(j,\ell)} \in L_2$, $e_i^{(j,\ell)} \in L_\infty$ and $\dot{e}_i^{(j,\ell)} \in L_\infty$, by Barbalat's lemma, it yields that $\lim_{t\to\infty} e_i^{(j,\ell)} = 0 \ \forall i, j, \ell$.

Control Implementation

- *Distributed control*: The control input of the jth subsystem depends on the state of the jth subsystem and the state of the neighboring subsystems.
- *Decentralized control*: The control input of the jth subsystem depends *only* on the state of the jth subsystem.
- The control signal

$$\mathbf{c}_L^{(j)} = \mathbf{y}^{(j)} + \frac{1}{a_{Lj}\widetilde{v}_j}\left(\sum_{\ell=0}^{\mathcal{C}} a_{\ell j}\widetilde{v}_\ell\left(\mathbf{y}^{(\ell)}(t-T_{\ell j}) - \mathbf{c}^{(\ell)}(t-T_{\ell j})\right) - \widetilde{v}_j\left(\mathbf{y}^{(j)} - \mathbf{c}^{(j)}\right)\right)$$

can be implemented in a distributed way.

Constraint on Control Input

- During the control design the physical meaning of the control inputs, that are concentrations, should be taken into account. This implies, that the control should always be positive, i.e. $\mathbf{c}_L^{(j)} \geq \mathbf{0}$ element-wise.
- The steady-state value of the control is

$$\mathbf{c}_L^{(j)*} = \frac{1}{a_{Lj}\widetilde{v}_j}\left(-\sum_{\ell=0}^{\mathcal{C}} a_{\ell j}\widetilde{v}_\ell \mathbf{c}_{SP}^{(\ell)} + \widetilde{v}_j \mathbf{c}_{SP}^{(j)}\right). \tag{1}$$

- The positiveness of the control input in steady state is assured if the following inequalities hold element-wise:

$$\sum_{\ell=0}^{\mathcal{C}} a_{\ell j}\widetilde{v}_\ell \mathbf{c}_{SP}^{(\ell)} \leq \widetilde{v}_j \mathbf{c}_{SP}^{(j)}, \ \forall j, \ell = 1 \ldots \mathcal{C}.$$

Control Robustness

- The resulting control does not depend on the nonlinear terms and on the reaction rate constants in the model of the addressed CRN subsystems; only the parameters of the convection network are necessary for the implementation.
- The parameter uncertainties in the CRN subsystems are not treated.
- The uncertainties in the convection networks are modeled as unknown additive disturbance flows.

Controlled Process Network

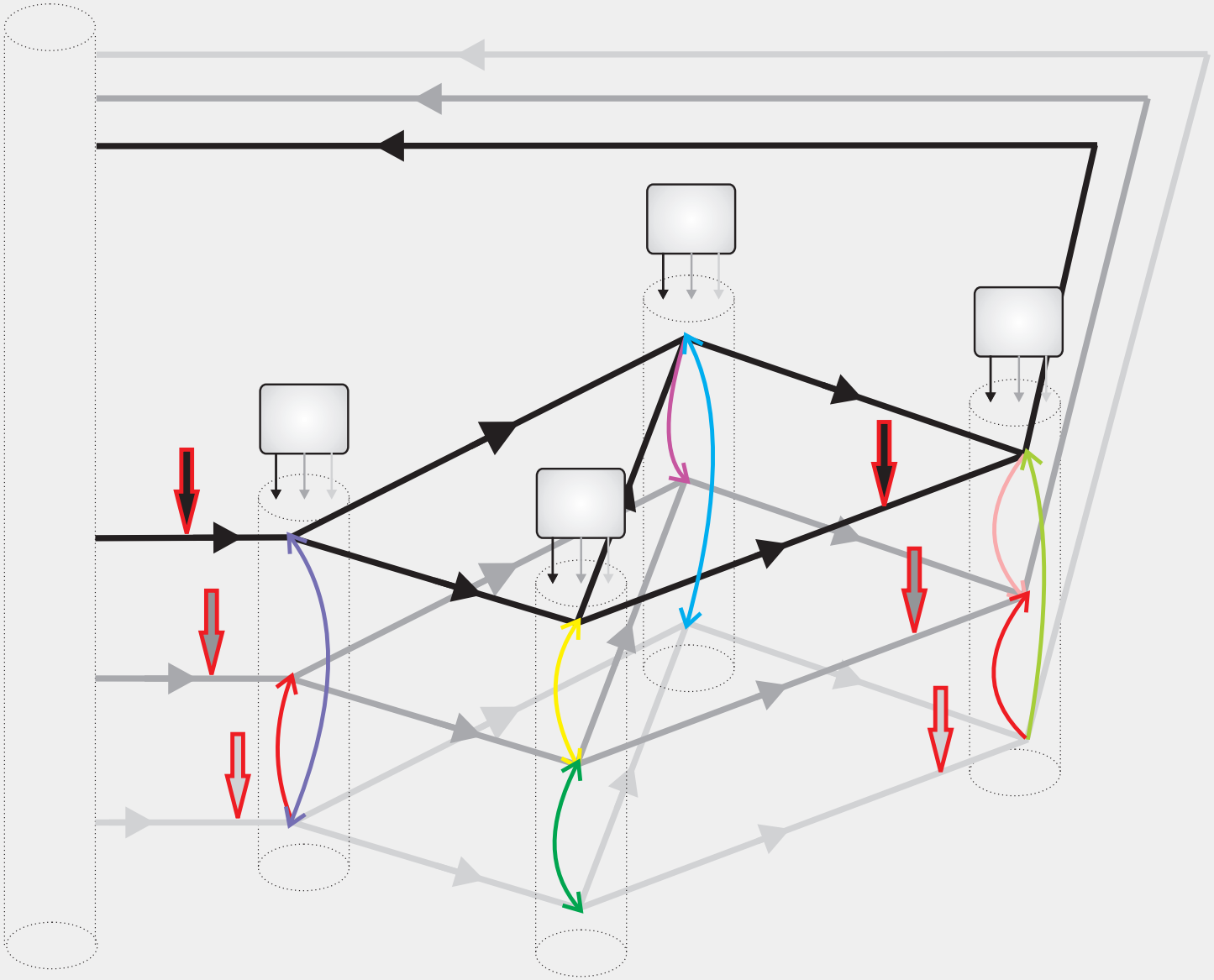

Open CRN Subsystems with Disturbance

- Consider that the CRNs in the interconnected system are subject to additive disturbances

$$\frac{d\mathbf{c}^{(j)}}{dt} = Y^{(j)} A_{\kappa}^{(j)} \varphi^{(j)}(\mathbf{c}^{(j)}) + \frac{1}{V_j}\mathbf{u}^{(j)} + \mathbf{d}^{(j)},\ j = 1 \ldots \mathcal{C}$$

  where the disturbance input $\mathbf{d}^{(j)}(t) \in \mathbb{R}^K$.
- The passivity property is preserved from $\mathbf{d}^{(j)}$ to $\mathbf{y}^{(j)}$.
- *Assumption:* The disturbance input $\mathbf{d}^{(j)}$ is continuous and

$$\|\mathbf{d}^{(j)}\|_2 \leq d_M^{(j)}$$

  where $d_M^{(j)} \in \mathbb{R}_+$ is a finite constant.
- Let $\mathbf{d} = (\mathbf{d}^{(1)T} \ \ldots \ \mathbf{d}^{(\mathcal{C})T})^T$. By the assumption above it yields

$$\|\mathbf{d}\|_2 \leq d_M,\ \text{where } d_M = \sqrt{\sum_{j=1}^{\mathcal{C}} \left(d_M^{(j)}\right)^2}.$$

Control in the Presence of Disturbance

- Choose $\mathbf{c}_L^{(j)}$ such that $\mathbf{u}^{(j)} = \mathbf{u}_{\mathrm{d}}^{(j)}$ where

$$\mathbf{u}_{\mathrm{d}}^{(j)} = \sum_{\ell=0}^{\mathcal{C}} a_{\ell j} \widetilde{v}_\ell \mathbf{y}^{(\ell)}(t - T_{\ell j}) - (1 - a_{Lj}) \widetilde{v}_j \mathbf{y}^{(j)} - \frac{\gamma}{2} \mathbf{y}^{(j)}, \ \gamma > 0.$$

- This augmented control follows the idea of high-gain control methods to attenuate the effects of unmodelled disturbances and uncertainties in the interconnections on the control performances: in stable control loops, with sufficiently high feedback gain the effect of the bounded disturbances on steady-state performances can be made arbitrarily small.

The Properties of the Augmented Control

Theorem: Consider a system of interconnected CRNs with disturbance. If the CRN subsystems have zero deficiency, are weekly reversible and persistent, the underlying graph of the interconnected system contains a directed spanning tree which root is the CSTR0, the disturbance is bounded and $\mathbf{c}_L^{(j)}$ can be chosen such that $\mathbf{u}^{(j)} = \mathbf{u}_{\mathrm{d}}^{(j)}$ element-wise with

$$\gamma > 1 + \frac{d_M}{\varepsilon},\ 0 < \varepsilon < \infty,$$

then $\mathbf{y}$ converges toward the set $\{\mathbf{y} \mid \|\mathbf{y}\|_2 \leq \varepsilon\}$.

The Properties of the Augmented Control

Idea of proof:

- Consider the same Lyapunov-Krasovskii functional:

$$S_\Sigma = 2\sum_{j=0}^{\mathcal{C}} S^{(j)} + \sum_{j=0}^{\mathcal{C}}\sum_{\ell=0}^{\mathcal{C}} a_{\ell j}\widetilde{v}_\ell \int_{t-T_{\ell j}}^{t} \mathbf{y}^{(\ell)\,T}\mathbf{y}^{(\ell)}\,d\xi.$$

- By applying the proposed control and the introduced assumptions, it can be shown that:

$$\dot{S}_\Sigma \leq -\sum_{j=0}^{\mathcal{C}}\sum_{\ell=0}^{\mathcal{C}} a_{\ell j}\widetilde{v}_\ell \mathbf{e}^{(j,\ell)\,T}\mathbf{e}^{(j,\ell)} + (d_M + (\gamma-1)\|\mathbf{y}\|_2)(d_M - (\gamma-1)\|\mathbf{y}\|_2).$$

- If $\|\mathbf{y}\|_2 \geq \varepsilon$ and $\gamma > 1 + \frac{d_M}{\varepsilon}$, $\dot{S}_\Sigma < 0$.
- The decrease of S_Σ involves that the terms $y_i^{(j)}$ tend to 0. The convergence of $y_i^{(j)}$ towards zero persists until $\|\mathbf{y}\|_2 \geq \varepsilon$.

Case Study

Process Network for Case Study

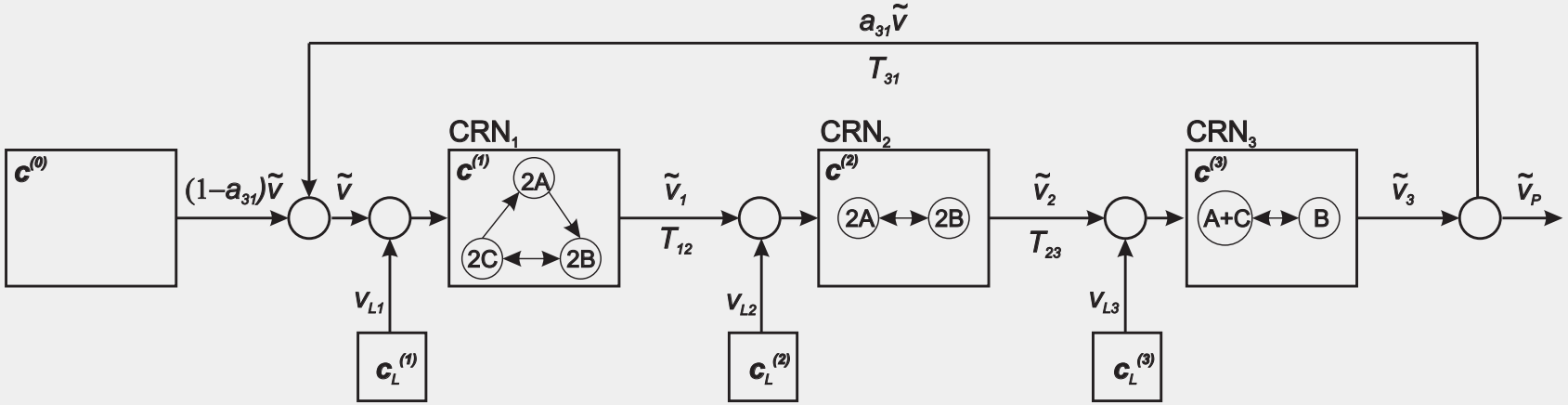

An interconnected CRN network was considered consisting of three different CRNs and the environment. The CRNs in the three subsystems are

$$CRN_1: \quad \mathcal{R}_{11}: 2C \xrightarrow{\kappa_{31}} 2A \xrightarrow{\kappa_{12}} 2B, \qquad \mathcal{R}_{12}: 2C \underset{\kappa_{23}}{\overset{\kappa_{32}}{\rightleftharpoons}} 2B.$$

$$CRN_2: \quad \mathcal{R}_2: 2A \underset{\kappa_{21}}{\overset{\kappa_{12}}{\rightleftharpoons}} 2B.$$

$$CRN_3: \quad \mathcal{R}_3: A + C \underset{\kappa_{54}}{\overset{\kappa_{45}}{\rightleftharpoons}} B.$$

Open loop Response

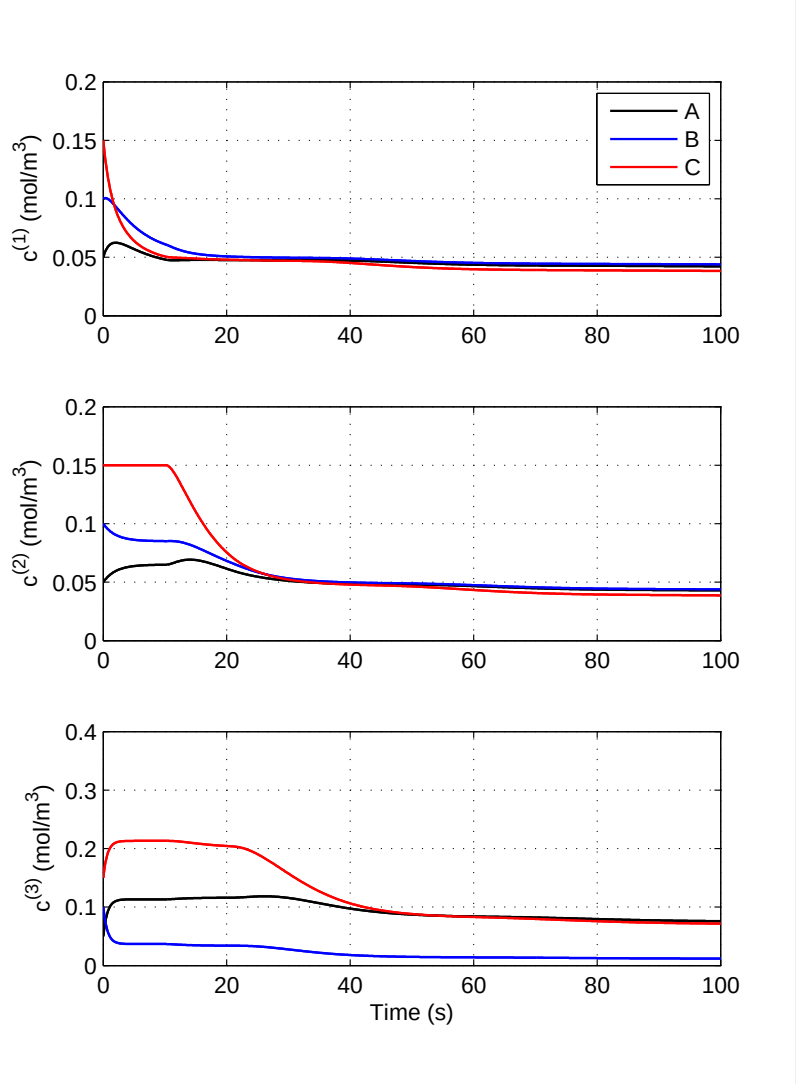

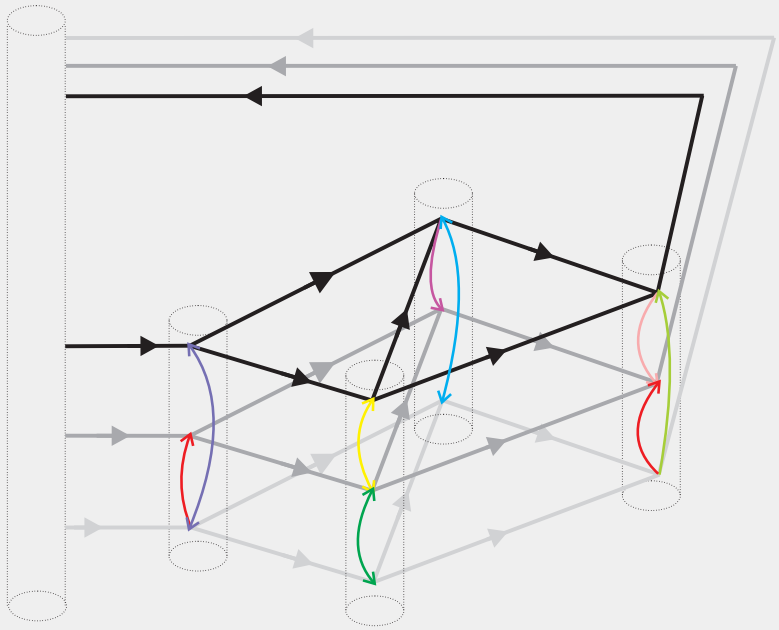

Setpoint Control

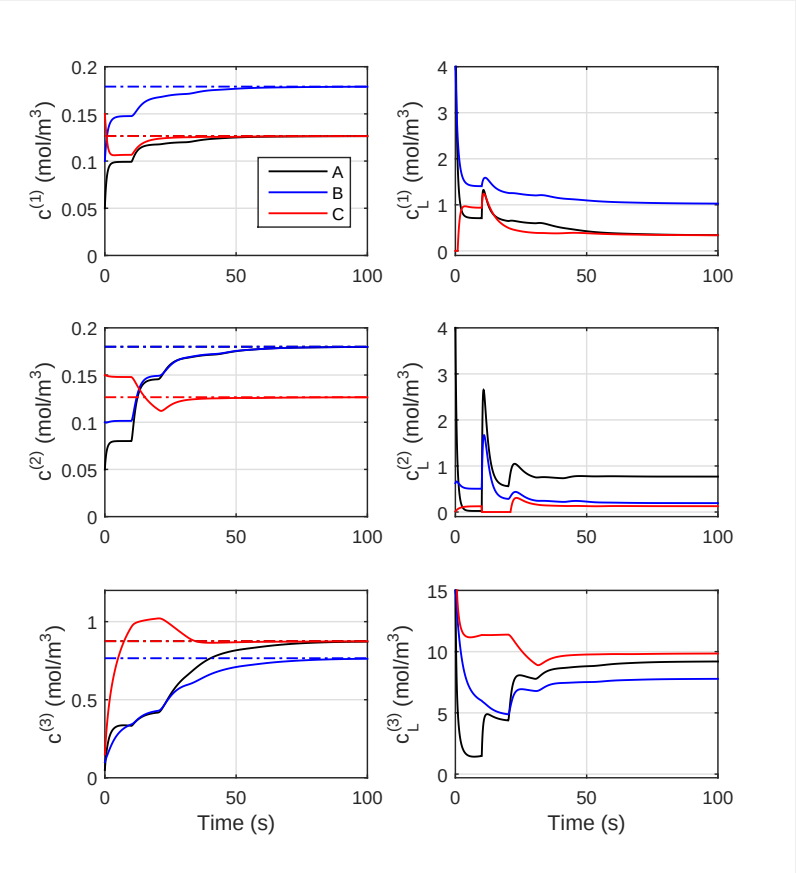

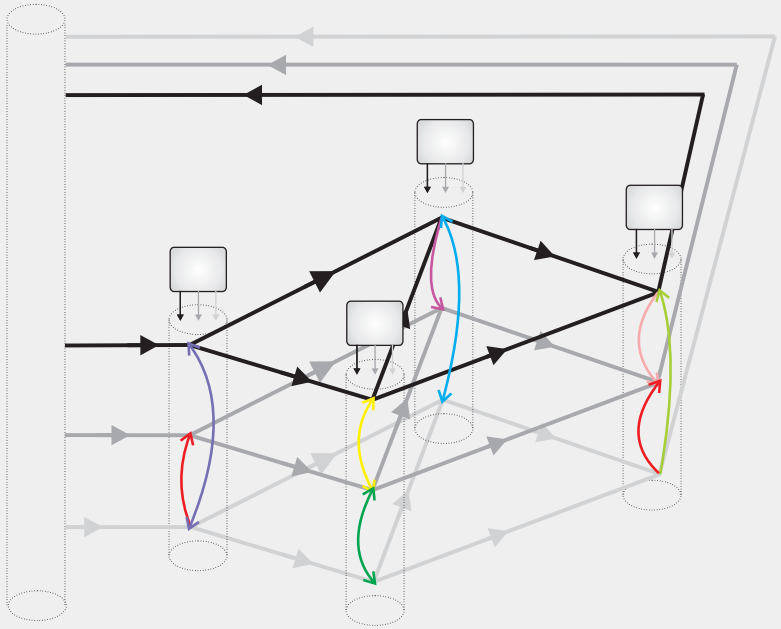

Comparison with an MPC Controller

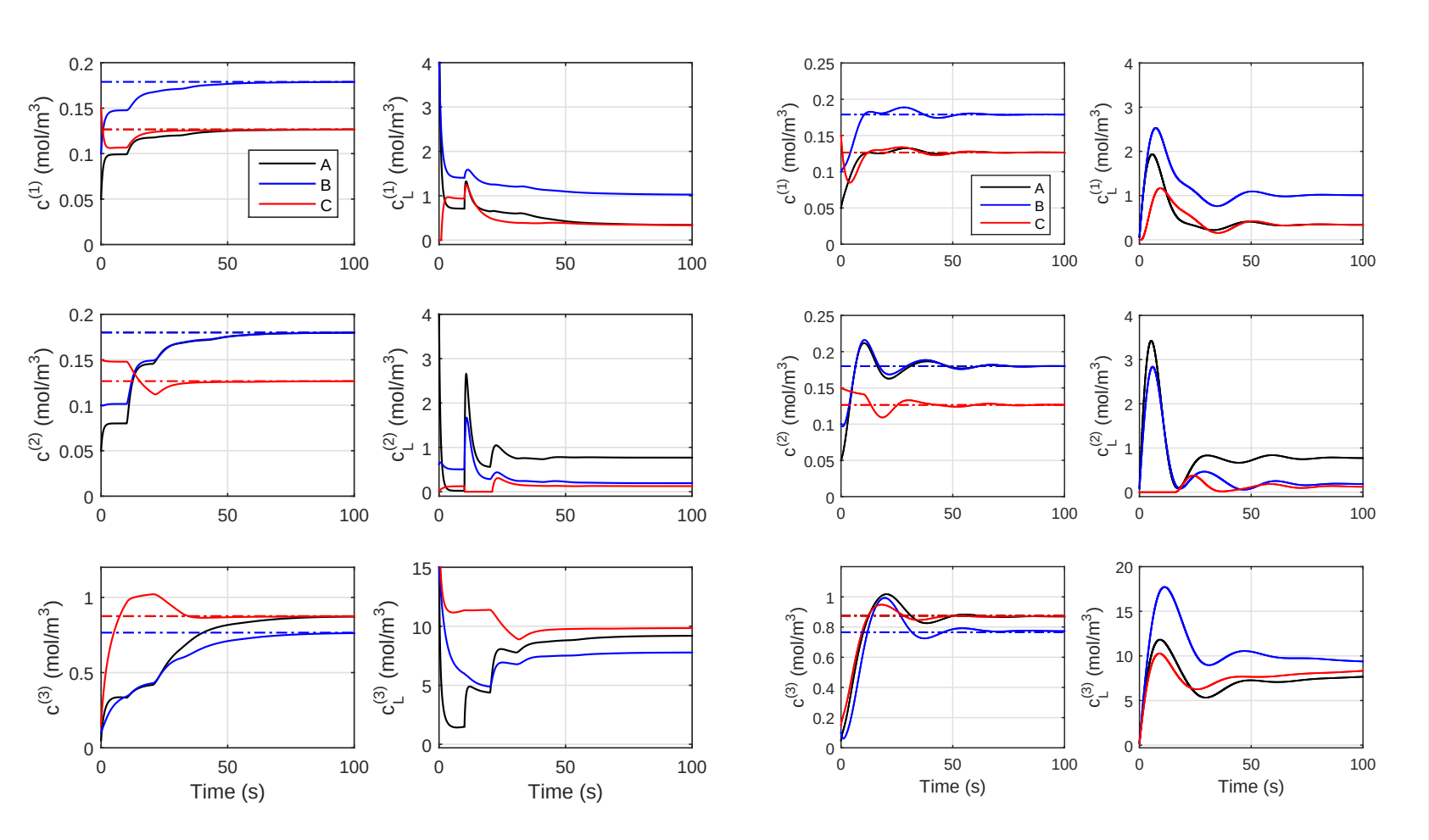

The Effect of the Controller Parameter (ζ) Tunning

Recall the control algorithm:

$$\mathbf{y}^{(j)} = \zeta \left(\mathrm{Ln}\mathbf{c}^{(j)} - \mathrm{Ln}\mathbf{c}^{(j)*} \right)$$

$$\mathbf{c}_L^{(j)} = \mathbf{y}^{(j)} + \frac{1}{a_{Lj}\widetilde{v}_j} \left(\sum_{\ell=0}^{\mathcal{C}} a_{\ell j}\widetilde{v}_\ell \left(\mathbf{y}^{(\ell)}(t - T_{\ell j}) - \mathbf{c}^{(\ell)}(t - T_{\ell j}) \right) - \widetilde{v}_j \left(\mathbf{y}^{(j)} - \mathbf{c}^{(j)} \right) \right)$$

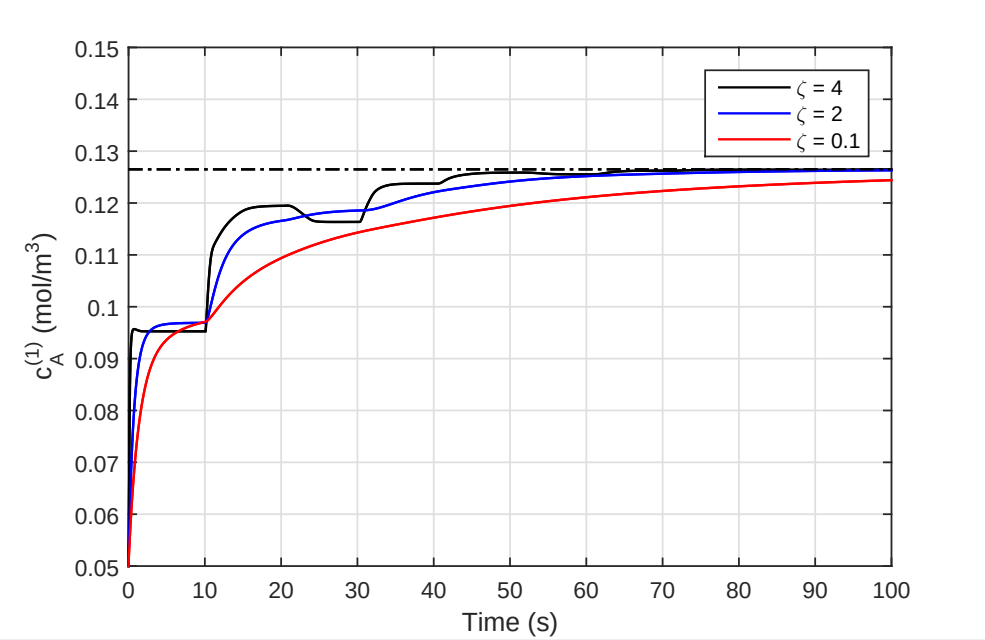

Control in the Presence of Disturbance

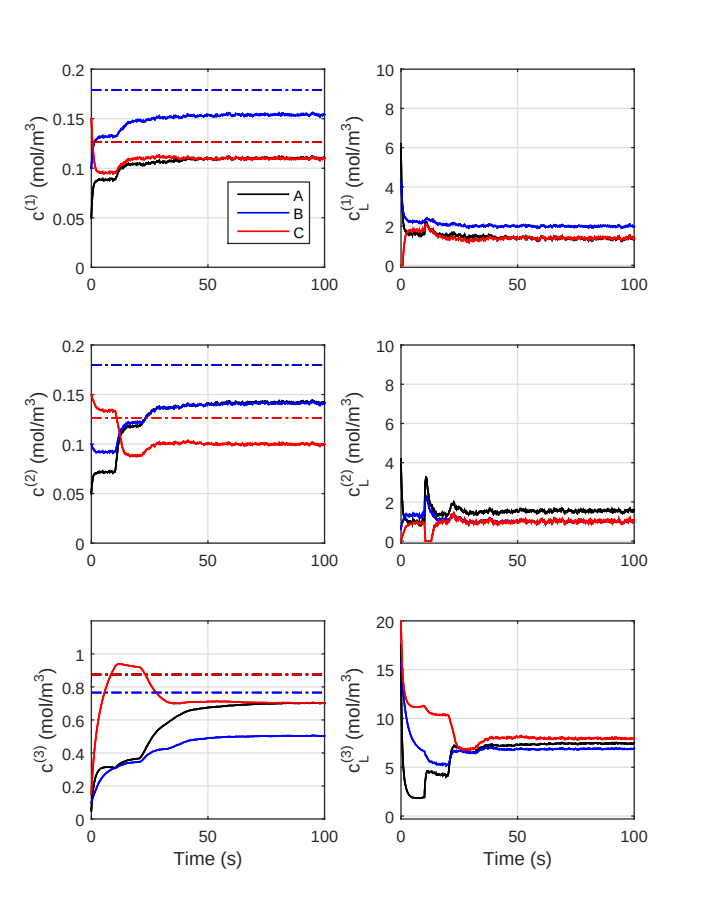

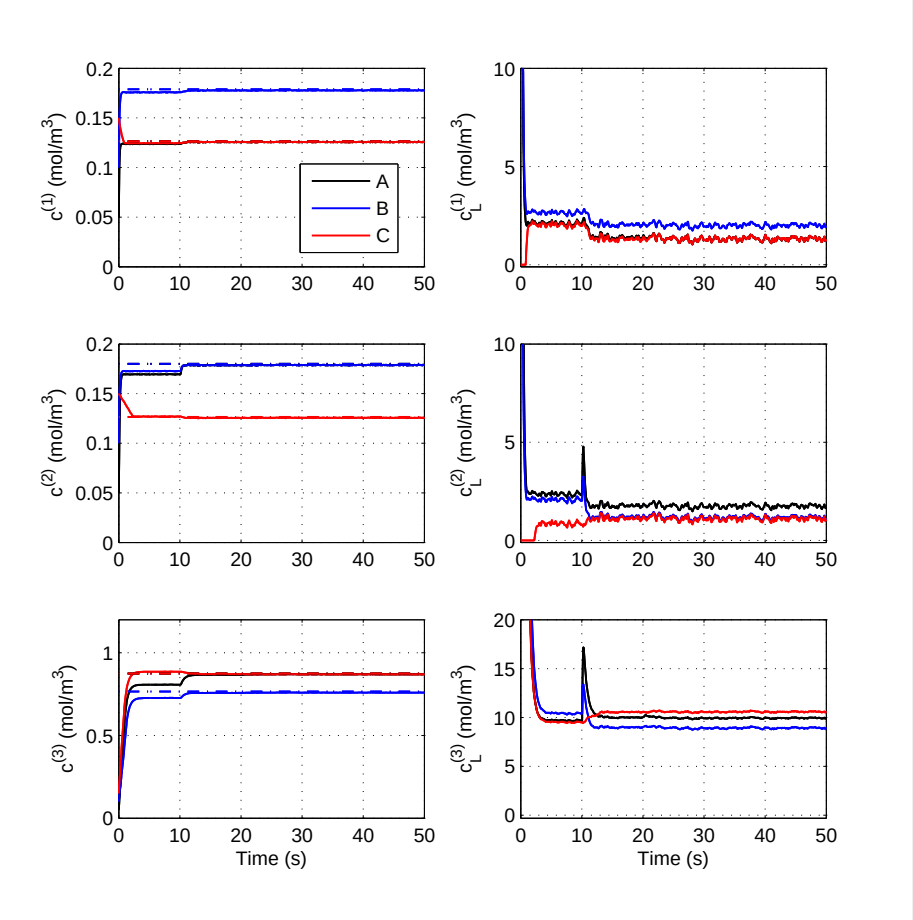

Conclusions

Conclusions

- The setpoint control problem of interconnected chemical reactions was lead back to the synchronization problem of multi-agent systems.
- The local controller of each CRN was formulated in function of its passive output and it can solve the setpoint regulation based only on information that is available at the corresponding reactor.
- A Lyapunov-Krasovskii functional based analysis shows that the setpoint regulation can be achieved in the presence of constant transport delay without any knowledge of the delay values.
- The resulting control does not depend on the nonlinear terms and on the reaction rate constants in the model of the addressed CRN subsystems; only the parameters of the convection network are necessary for the implementation.
- An augmented version of the proposed control was also introduced for such cases when the CRNs are subject to input disturbance flows.
- The performed simulation investigations confirm the efficiency of the proposed control approach.